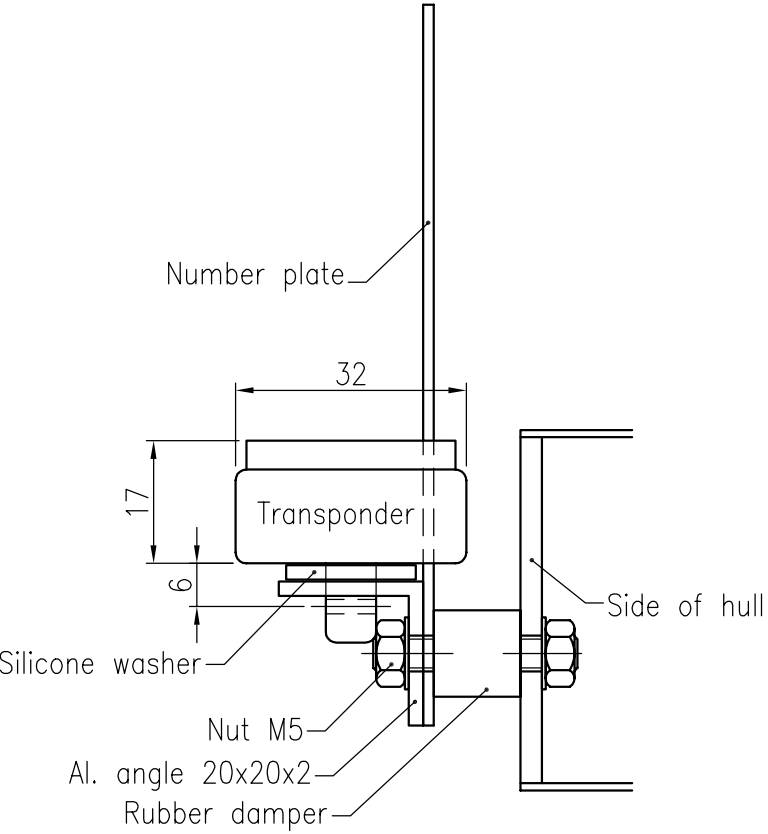

Rear view

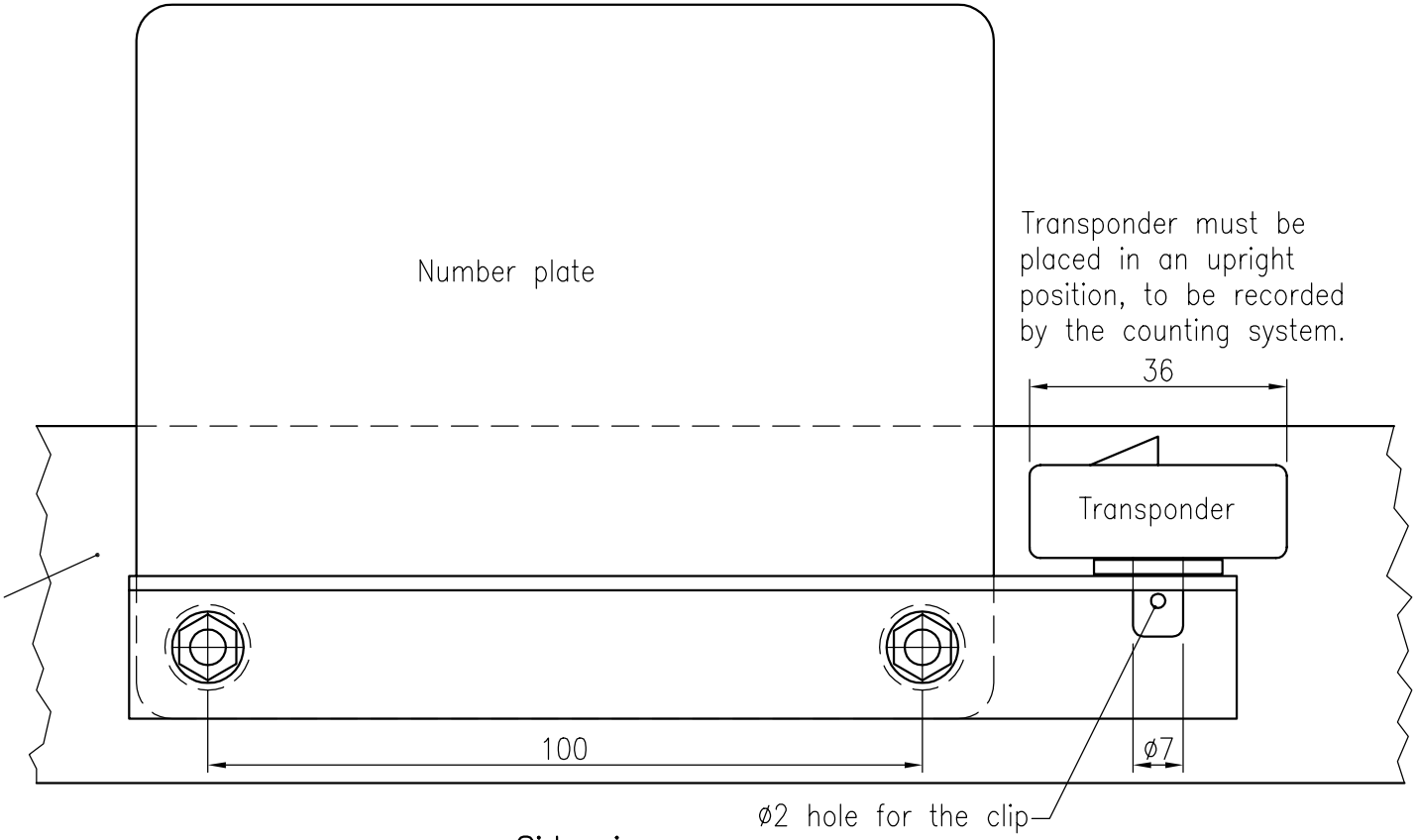

Side view